TECHNICAL SPECIFICATION SHEET

50 WATT, MH M110, HX-HPF BALLAST E-MZAXXX50, 60Hz

CAPACITOR

RATING 6 MFD±3%
200 VAC. MIN

Dry Film Capacitors
Thermal Plastic Case

Dry film capacitor contains no oil; are furnished with 12" leads and includes discharge resistor.

Max. case temp. 110°C

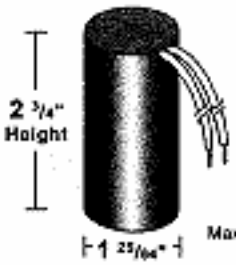

IGNITOR

356-AS-100 MH
(Thermal Plastic Case)

2 F.T. MAX
Distance to lamp.

Max. case temp. 110°C

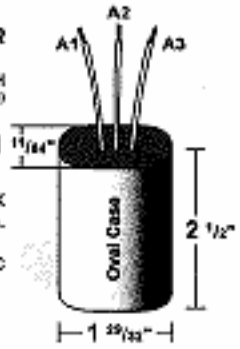

BRACKET

CORE & COIL
MOUNTING BRACKET

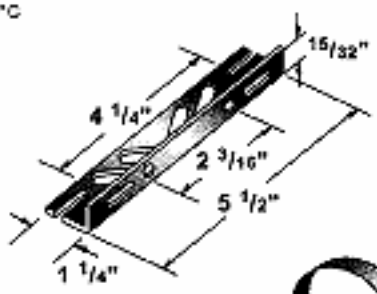

KB39
Mounting bracket for Core & Coil Ballasts
(1 bracket with thru bolts)

C-01

MOUNTING CLIP for round case (Furnished as standard with B suffix ballasts)

I-01

MOUNTING CLIP for oval case (Furnished as standard with B suffix ballasts)

CORE AND COIL

(3" x 4" CORE)

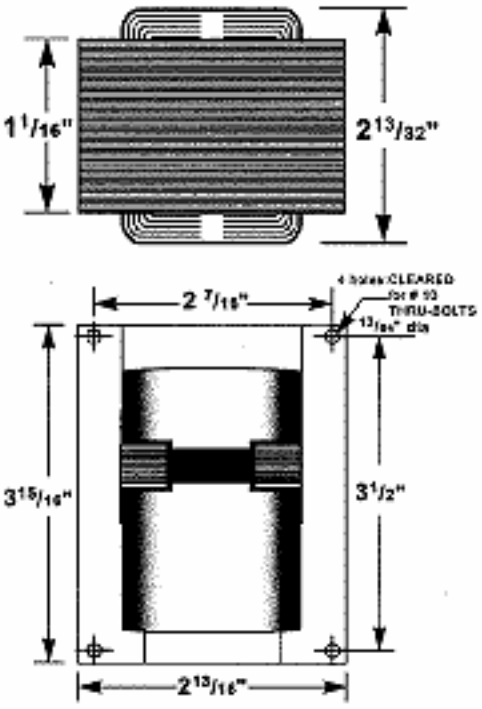

SOLA ballast leads wires are properly identified indicating on their surfaces the input voltages. ALL LEAD LENGHTS: 12 INCHES

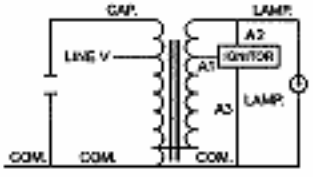

SINGLE VOLTAGE

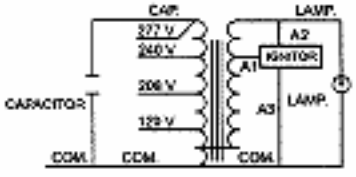

MULTI VOLTAGE
120/208/240/277
VOLT CONNECTION

ELECTRICAL CHARACTERISTICS

INPUT VOLTAGE RANGE	±5%
POWER FACTOR	HIGH
LAMP POWER REG.	±12%
MIN. STARTING TEMP.	-20°C

LR 106489

File No. E182278

Line Voltage	Catalog Number	Circuit Type	Input Watts	Line Current (AMPS) Operating	Line Current (AMPS) Open Circuit	Line Current (AMPS) Starting	Open Circuit Voltage	Drop Out Voltage	Fuse	Ballast Net Weight (lbs)	UL Bench Top Rise Code 1029
120/277	E-MZA0FT50	HX-HPF	67	0.6/0.25	1.33/0.58	0.65/0.28	250	90/208	3/2	4.1	B
208	E-MZA00R50	HX-HPF	67	0.35	0.77	0.36	250	150	3	4.1	B
240	E-MZA00M50	HX-HPF	67	0.30	0.68	0.35	250	175	2	4.1	B
277	E-MZA00T50	HX-HPF	67	0.25	0.58	0.28	250	208	2	4.1	B
120 or		HX-HPF	67	0.60	1.33	0.65	250	90	3	4.1	
208 or		HX-HPF	67	0.35	0.77	0.36	250	150	3	4.1	
240 or	E-MZA00W50	HX-HPF	67	0.30	0.68	0.35	250	175	2	4.1	B
277		HX-HPF	67	0.25	0.58	0.28	250	208	2	4.1	

ORDERING INFORMATION

***Add proper suffix to catalog number when ordering as indicated below:
No suffix= Core and Coil and Ignitor Only
B= Core and Coil, Ignitor and Bracket
C= Core and Coil, Ignitor and Capacitor
BC= Core and Coil, Ignitor, Capacitor and Bracket

Lighting & Power Source
6064 Jerome Trail
Dallas, TX 75252
Toll Free: (888) 385-4448
Tel: (972) 248-3399 Fax: (972) 248-4748
Website: www.ballastsource.com

ISB SOLA BASIC BALLASTS

FEBAM50/00-0500